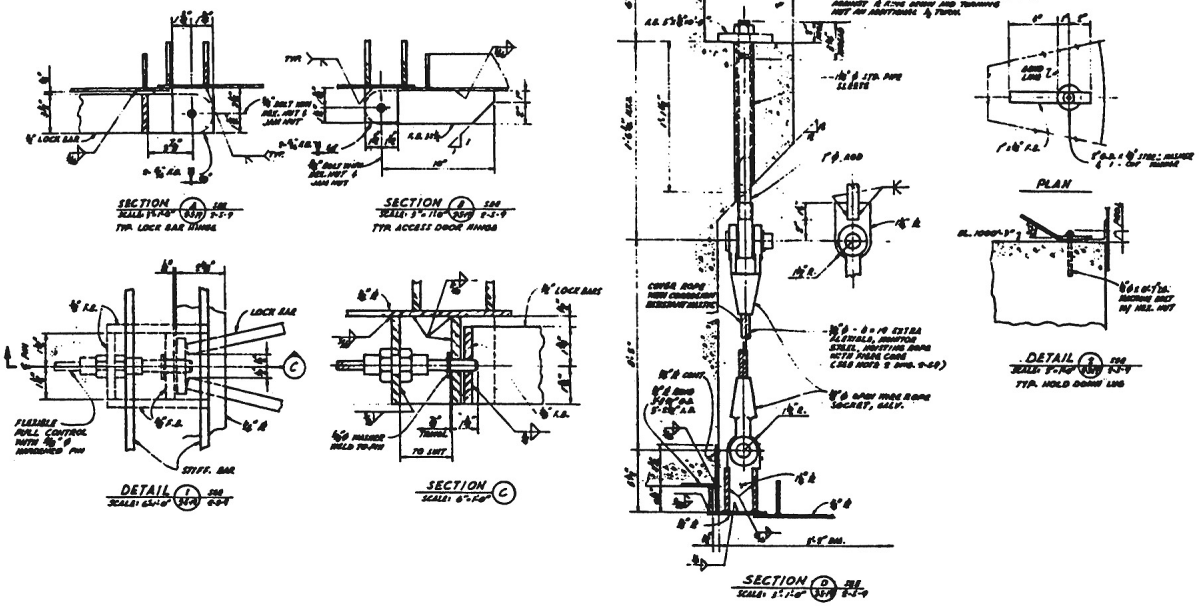

NOTES

1. FOR ESCAPE HATCH ARRANGEMENT AND DETAILS NOT SHOWN, SEE DWG. 2-3-9.

3 IN. = 1 FT.

6 IN. = 1 FT.

FOR SITES 1 2 3 4 5 6 7 8 9 10 11

REV. TO SHOW CONSTR.

AS-BUILT CONDITION

BECHTEL CORPORATION
ENGINEERS AND CONSTRUCTORS

DEPARTMENT OF T

WS-107 A-1 OPERATIO

UNITARY SI LC

LAUNCH CONTROL

ESCAPE HATCH DETAI

578-2-3-

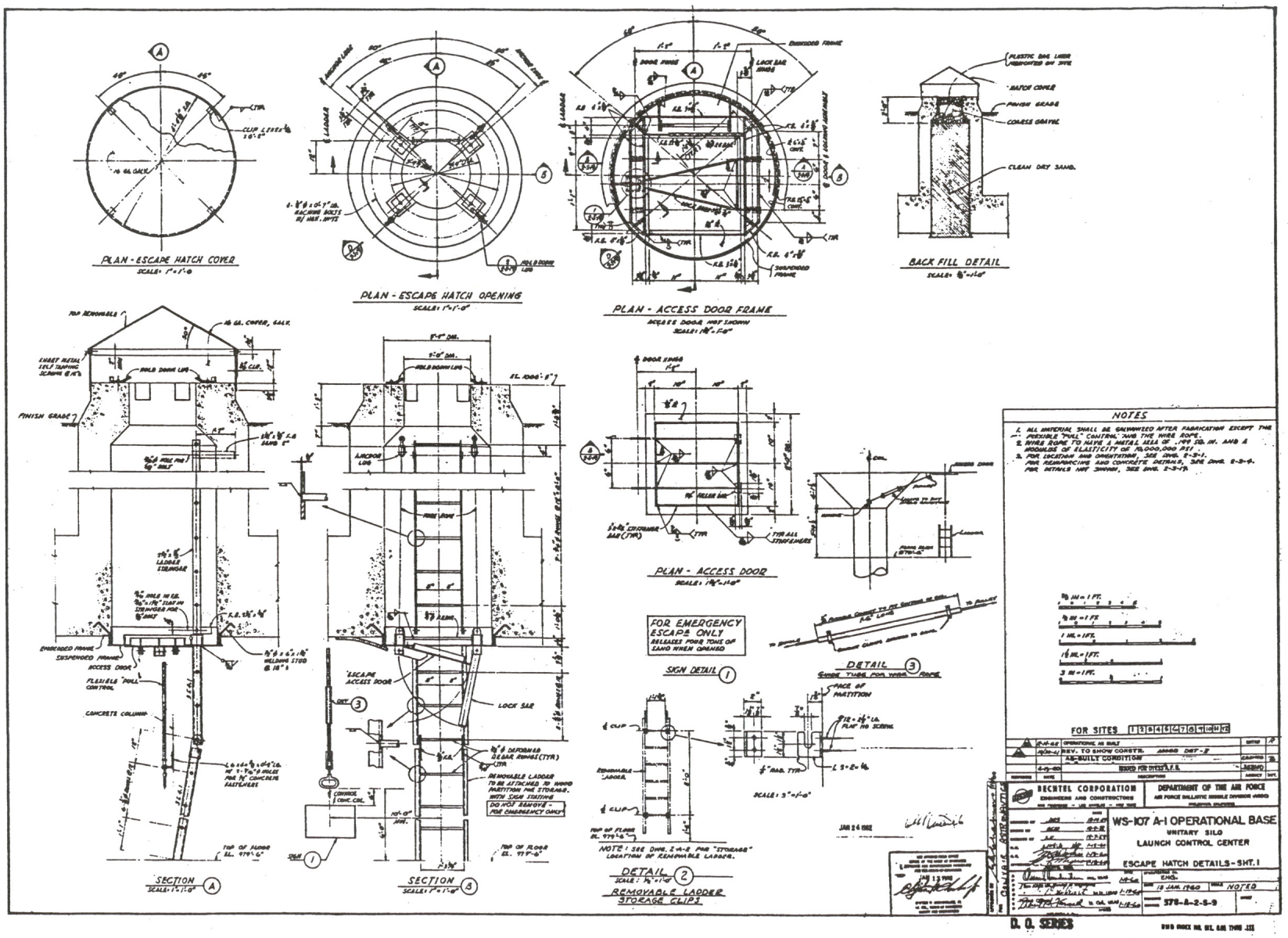
PLAN - ESCAPE HATCH COVER
SCALE: 1"=1'-0"
PLAN - ESCAPE HATCH OPENING
SCALE: 1"=1'-0"
PLAN - ACCESS DOOR FRAME
ACCESS DOOR NOT SHOWN
SCALE: 1½"=1'-0"
BACK FILL DETAIL
SCALE: ⅜"=1'-0"
PLASTIC BAG LINER REMOVED ON SITE
HATCH COVER
FINISH GRADE
COARSE GRAVEL
CLEAN DRY SAND.
SECTION A
SCALE: 1"=1'-0"
SECTION B
SCALE: 1"=1'-0"
PLAN - ACCESS DOOR
SCALE: 1½"=1'-0"
FOR EMERGENCY ESCAPE ONLY
RELEASES FOUR TONS OF SAND WHEN OPENED
SIGN DETAIL 1
DETAIL 3
GUIDE TUBE FOR WIRE ROPE
DETAIL 2
SCALE: 1½"=1'-0"
REMOVABLE LADDER STORAGE CLIPS
NOTE: SEE DWG. 2-A-2 FOR "STORAGE" LOCATION OF REMOVABLE LADDER.
NOTES
1. ALL MATERIAL SHALL BE GALVANIZED AFTER FABRICATION EXCEPT THE FLEXIBLE "PULL" CONTROL AND THE WIRE ROPE.
2. WIRE ROPE TO HAVE A METAL AREA OF .199 SQ. IN. AND A MODULUS OF ELASTICITY OF 10,000,000 PSI.
3. FOR LOCATION AND ORIENTATION, SEE DWG. 2-3-1.
FOR REINFORCING AND CONCRETE DETAILS, SEE DWG. 2-3-4.
FOR DETAILS NOT SHOWN, SEE DWG. 2-3-19.
FOR SITES 1 2 3 4 5 6 7 8 9 10 11 12
OPERATIONAL AS BUILT
REV. TO SHOW CONSTR.
AS-BUILT CONDITION
ISSUED FOR DYESS A.F.B.
BECHTEL CORPORATION
ENGINEERS AND CONSTRUCTORS
DEPARTMENT OF THE AIR FORCE
AIR FORCE BALLISTIC MISSILE DIVISION (AMSC)
WS-107 A-1 OPERATIONAL BASE
UNITARY SILO
LAUNCH CONTROL CENTER
ESCAPE HATCH DETAILS - SHT. 1
ENG.
18 JAN. 1960
NOTED
578-A-2-S-9
D. O. SERIES